AN OFDM BASED SOLUTION TO PROVIDE RELIABLE PACKET DELIVERY IN WIMAX NETWORKS

Aditya Kaushal *

ABSTRACT

A Wimax network is once of most appealing network that covers most of needs of a business network. A network that requires security at high data speed is fulfilled by Wimax. Although this as the data is transferred at very high speed a small delay in communication or any decision making process will result the data loss over the network. Such kind of problem occur in a hierarchical network where multiple users transfer data to other network, In such case the connecting node to these two network suffers the problem of bottleneck problem. As in case of bottleneck there is a tight end for the outside communication and it results the data loss. The proposed work is the implementation of OFDM to resolve this bottleneck problem. The Proposed work is the better utilization of network bandwidth to get the reliable solution. The bandwidth is shared by connecting nodes respective to the variable length data request. The system will first observe the number of request being transferring and the size of data communication made by each request and on this basis the bandwidth will be assigned to each network.

Keywords: *Wimax, OFDM, Bottleneck, Hierarchical, Bandwidth.*

* Lovely Professional University, Phagwara.

I INTRODUCTION

With the introduction of **WiMAX** network as **IEEE 802.16** the complete architecture of computer network is changed. Now the expectations of a user increased in terms of speed and accuracy. Wimax provide a network without any restriction. It can work with any kind of network either the local or the global. It works for computers as well as the mobile network.

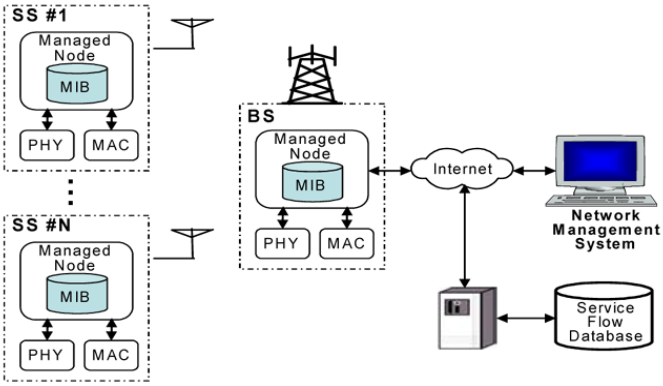

Figure 1: Wimax Information Base Architecture

It gives a better enhancement over the wired network and represents the wireless more reliable, efficient and easy configured network. The Wimax technology offers around 72 Mega Bits per second without any need for the cable infrastructure. Wimax technology is actually based on the standards that making the possibility to delivery last mile broadband access as a substitute to conventional cable and DSL lines.

WiMAX MAC layer is responsible for QoS. WiMAX MAC layer support real time, non real time and best effort data traffic and its high data rate, sub channelization, and flexible scheduling improve the QoS. WiMAX architecture is very flexible. It can support point to point and point to multipoint connection according to its requirements. It also supports IP-based architecture that is easily converge with other networks and takes advantage of application development from the existing IP based application.

WiMAX support both time division duplex and frequency division duplex which helps in spectrum management, transceiver design and low cost system development.WiMAX offer optimized handover which support full mobility application such as voice over internet protocol (VOIP). It has also the power saving mechanism which increases the battery life of handheld devices. WiMAX support extensible security feature for reliable data exchange. It use Advanced Encryption Standard (AES) encryption for secure transmission and for data integrity, it use data authentication mechanism.

The above figure 1 shows the management reference model for BWA (Broadband Wireless Access) networks. This consists of a Network Management System (NMS), some nodes, and

a database. BS and SS managed nodes collect and store the managed objects in an 802.16 MIB format. Managed objects are made available to NMS using the Simple Network Management Protocol (SNMP).

When a customer subscribes to the WiMAX service, the service provider asks the customer for the service flow information. This would include number of UL / DL connections with the data rates and QoS parameters. The customer also needs to tell the kind of applications that he proposes to run.

The complete Wimax network is designed as the communication between

1. Wimax Base Station
2. Wimax Transceiver

WiMAX base station is similar to a cellular network base station which consists of a WiMAX tower and indoor electronics. Base station performs the MAC and PHY features. It also handles the signaling and user scheduling. It is also responsible for uplink and downlink bandwidth management on a real time basis and frequency reuse. WiMAX uses fiber optic cable or microwave link to connect high speed point to point link. Point to multipoint connectivity is uses in mesh network but usually it uses point to point antennas to connect different base stations and customer premises sites across a long distance.

Depending on the frequency range WiMAX can provide two types of Wireless services, Line of sight (LOS) and Non line of sight (NLOS). LOS operates in higher frequencies between 10-66 GHz. This frequency range is called millimeter bands. Since line of sight uses higher frequencies, it can provide higher bandwidth with less interference. It's coverage area also huge. Theoretically it is 30 mile radius. For LOS there should be direct contact between the WiMAX tower and the dish antenna from the customer sight which could be placed in the rooftop or a pole. In this way subscriber can get great data capacity. NLOS uses lower frequencies between 2 GHz to 11 GHz. This lower frequency range is called centimeter band. The advantage of these lower frequencies is, it can bend or distract around obstacles. This advantage helps the multipoint communication, so more customers can get the services from a single tower which reduces the service cost also. In this way WiMAX enabled computers can get full speed internet services within the coverage area but the coverage is lower than the line of sight communication. Usually it is 4 to 6 mi radius which is similar to a cell phone coverage area.

Frequency division multiplexing (FDM) is a technology that transmits multiple signals simultaneously over a single transmission path, such as a cable or wireless system. Each

signal travels within its own unique frequency range (carrier), which is modulated by the data (text, voice, video, etc.).

Orthogonal FDM's (OFDM) spread spectrum technique distributes the data over a large number of carriers that are spaced apart at precise frequencies. This spacing provides the "orthogonally" in this technique which prevents the demodulators from seeing frequencies other than their own. The benefits of OFDM are high spectral efficiency, resiliency to RF interference, and lower multi-path distortion. This is useful because in a typical terrestrial broadcasting scenario there are multipath-channels (i.e. the transmitted signal arrives at the receiver using various paths of different length). Since multiple versions of the signal interfere with each other (inter symbol interference (ISI)) it becomes very hard to extract the original information.

II LITERATURE SURVEY

Since WLAN OFDM Transceiver on both IEEE 802.11a and IEEE 802.11b is the most usable technique to achieve a high performance communication, by means of some modifications evaluate an IEEE 802.11g Transceiver behavior against some link impairments as frequency offset, Inter-carrier interference, phase noise, etc. This paper focuses on the analysis of simulation results of a link impairments applied on a WLAN OFDM Modulation. More specifically, it uses the power of ADS 1 2005A simulation techniques to evaluate phase noise and Frequency Offsets Effects on an OFDM 802.11 g transreceiver [1]. It is considered carrier frequency offset (CFO) estimation for single carrier and single-user transmission over a frequency-selective channel. When training is solely devoted to frequency synchronization, it is important to design the training to optimize CFO estimation performance. In this paper it exhibits the training sequence that minimizes the Cramer-Rao bound associated with the carrier frequency offset and averaged over the channel statistics following a correlated Ricean fading channel model. Simulations show significant improvements compared to the standard pseudorandom white training sequence [2].

The concepts of Wi-Max technology, which employs microwave for the transfer of data wirelessly, and it also present its comparison with Wi-Fi, and 3G technologies. Wi-Max is delivering broadband wireless access to the masses and represents alter native to digital subscriber lines (DSL) and cable broadband access. Wi-Max is based on IEEE 802.16 standard and is scalable. It stands for wireless (WI) microwave access (MAX). Wi-Max will provide anywhere, anytime connectivity. Features of Wi-Max are OFDM i.e. Orthogonal Frequency Division Multiplexing, Sub Channelization, Directional Antennas and Adaptive

Modulation, which make Wi-Max as the technology of today. The Benefit of Wi-Max technology is that the signals can be run very close to each other on wireless channels. Super narrow lanes can put a lot of traffic over them without disturbance. Many technologies currently available can only provide line of sight (LOS) coverage; the technology behind WI-MAX has been optimized to provide excelled non-line of sight (NLOS) coverage [3].

Wi-Fi and Wi-Max, Both are cost effective. They designed, implemented and deployed MAC- and network –layer mechanisms that to enable the low cost point-to-point and point-to-multipoint networks using off-the-shelf Wi-Fi equipment. Channel-induced and Protocol-Induced losses were studied on Wi-Fi Links in long distance settings and therefore to remove this problem WWLDMAC, new TDMA- based MAC with adaptive loss recovery mechanism was built. This helped in improving the end-to-end throughput and spectrum usage in multihop point-to-point backbone links. A limitation that arises is that of Topology Restriction [4].

"Quality of Service" in WiMAX Network running in a distributed mesh mode configuration. The IEEE 802.16-2004 standard and various previous works were discussed related to the proposed scheme and were reviewed. The proposed approach consists of three main parts: admission control, bandwidth manager, and packet scheduler. The bandwidth manager exploits the deficit round robin scheduling algorithm (DRR). The packet scheduler uses the self-clocked fair queuing scheduling scheme. Simulation scenarios using Network Simulator 2 were conducted in order to investigate the efficiency and correctness of the proposed approach. The simulation results demonstrate that the proposed scheme performs better than the previous schemes. The results also showed that proposed scheme is capable of ensuring Quality of Service as long as the network an satisfy the bandwidth[5][6].

A broadcast tree-based centralized scheduling mechanism for an IEEE 802.16 mesh network. Comparing with previous methods, the method used here is centralized scheduling, with weighted graph that has better network throughput and also shorter scheduling length than un-weighted graph approach. Furthermore, in the limited time slots situation, our BTB mechanism can schedule more SSs in a frame [7].

In designing the common training signal, a training signal structure which yields low complexity estimation methods is developed while the optimality of the training signal is maintained. Frequency offset estimation is based on the best linear unbiased estimation principle while channel estimation is based on the least squares (also maximum likelihood) approach. The proposed training signal and estimation methods can be applied to systems with pilot-only training signals as well as those with pilot-data multiplexed signals. The

estimation range of the frequency offset can be flexibly adjusted. The performances of the proposed methods are very close to the Cramer-Rao bounds or theoretical minimum mean square error[8].

III RESEARCH METHODOLOGY

Wimax is one of the emerging wireless network technologies that provide higher bandwidth and the high speed data communication over the network in a large area. Efficiency and security both are provided by Wimax networks. But when we talk about a mesh topology where the nodes are arranged in a tree network, a parent node has to perform the multiple inputs and the multiple outputs. This situation is called the bottleneck problem, where the end from which from complete network communication is handled having a heavy data transmission.

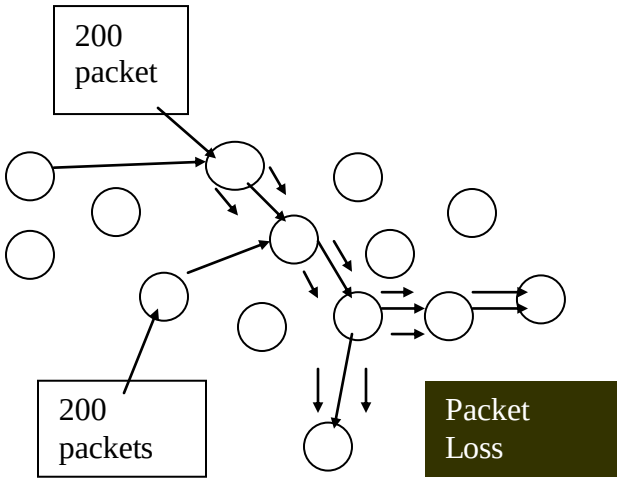

Figure 2: Bottleneck Problem

In figure 2 here we have represented a network with the bottle neck problem where a node having the maximum load to connect to some other node or the network. There is no substitution path to move to the destination node. This bottleneck problem results in network congestion and packet loss. Because of this we are presenting an approach to share the network bandwidth in such way that the maximum utilization of bandwidth will be performed. This proposal is represented as the OFDM implementation in the network. The OFDM gives a dynamic frequency based utilization of the bandwidth.

The proposed work will result better efficiency and lower packet loss over the WiMAX network. In this proposed work we are offering an approach to share the available bandwidth in such a way that it will give the better efficiency and throughput without changing the infrastructure or the routing algorithm.

To work with the available bandwidth we need to give some kind of parallelism in the available network. The complete work is about the better utilization of the channel. The proposed work is here presented in the figure 3.

Spectrum sensing: Either by cooperating or not, the cognitive radio nodes regularly monitor the RF environment. To improve the spectral usage efficiency, cognitive radio nodes should not only find spectrum holes by sensing some particular spectrum, but also monitor the whole spectral band.

Spectrum analysis: The characteristics of the spectral bands that are sensed through spectrum sensing are estimated. The estimation results, e.g., capacity, and reliability, will be delivered to the spectrum decision step.

Spectrum decision: According to the spectrum characteristics analyzed above, an appropriate spectral band will be chosen for a particular cognitive radio node. Then the cognitive radio determines new configuration parameters, e.g., data rate, transmission mode, and bandwidth of the transmission.

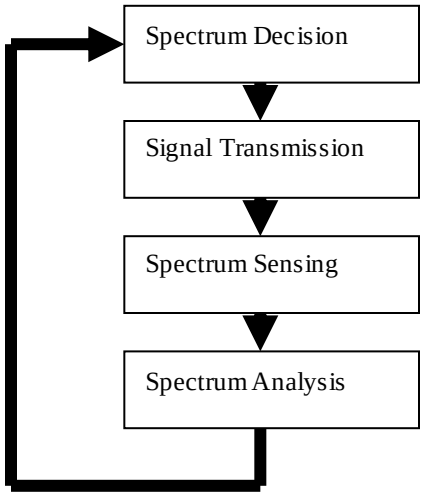

Figure 3: Functionality of proposed model

The basic parameters that we have to analyze are

- Operating frequency: cognitive radio is capable of changing its operating frequency in order to avoid the PU or to share spectrum with other users.
- Modulation scheme: cognitive radio should adaptively reconfigure the modulation scheme, according to the user requirements and the channel conditions.
- Communication technology: cognitive radio can also be used to provide interoperability among different communication systems by changing modulation scheme etc.

- Transmission power: Within the power constraints, transmission power can be reconfigured in order to mitigate interference or improve spectral efficiency.

REFERENCES

1. M. Morelli and U. Mengali, "An improved frequency offset estimator for OFDM applications," *IEEE Communications Letters*, vol. 3, pp. 75-77, Mar. 1999.
2. M. Ghogho and A. Swami,"Unified Framework for a Class of Frequency-Offset Estimation Techniques for OFDM," IEEE Int. Conference on Acoustics, Speech and Signal Processing (ICASSP'2004), Montreal, Canada, May 2004.
3. Ms. Shilpa Jindal (2005) Grouping Wi-Max , 3G and Wi-Fi for Wireless Broadband.
4. Mr. Bharat Singh (2010) A High Performance Point-To-Point Rural Wi-Fi and Wi-Max Access Networks In Developing Regions.
5. Mr. Mehmet Abbak (2010) Broadband Antenna For GSM, UMTS and LTE Wi-Max Applications.
6. Awadh Al Shukaili , Naveen Chilamkurti and Sherali Zeadally(2010) Enabling "Quality of Service" in IEEE802.16 Networks for Distributed Mesh Topologies.
7. Jamal Mountassir, Horia Balta, Marius Oltean, Maria Kovaci and Alexandru Isar (2010) - A Physical Layer Simulator for WiMAX in Rayleigh Fading Channel
8. H. Minn, P. Tarasak and V. K. Bhargava, "Some Issues of Complexity and Training Symbol Design for OFM Frequency Offset Estimation Methods Based on BLUE Principle," IEEE VTC'03 (Spring), 1288-1292, April 2003.
9. IEEE Std 802.16-TM 2004 (Revision of IEEE Std 802.16-2001), "IEEE standard for local and metropolitan area networks – Part 16: Air interface for fixed and mobile broadband wireless access systems," Oct. 2004.
10. Sik Choi, Gyung-Ho Hwang, Taesoo Kwon, "Fast Handover Scheme for Real-Time Downlink Services in IEEE 802.16e BWA System", IEEE VTC 2005 spring, Sweden, May 2005, Vol. 3 (2005), pp. 2028-2032.
11. Doo Hwan Lee, etc, "Fast Handover Algorithm for IEEE802.16e Broadband Wireless Access System", Proceedings of 1st International Symposium on Wireless Pervasive Computing, Jan 2006, pp 142-145.
12. IEEE 802.16e 2005, "IEEE Standard for Local and Metropolitan Area Networks - Part 16: Air Interface for Fixed and Mobile Broadband Wireless Access Systems - Amendment 2: Physical and medium access control layers for combined fixed and mobile operation in licensed bands and corrigendum 1," February 2006

13. P. Mach and R. Bestak, "WiMAX Performance Evaluation" IEEE conference on Networking, ICN '07, Apr. 2007, pp.17.