PREDICTION OF RAINFALL MAGNITUDE IN ENUGU USING THE ARTIFICIAL NEURAL NETWORK

Onuamah, P. N. *

ABSTRACT
Climate change is a great change factor in the flow of primary sectoral activities in Nigeria and generally in the world. Researchers have already taken time and period to record weather parameter intensities across Nigeria over some statistical period but the weather factor variables keep on the change. It then becomes necessary to apply the neural network that will latch on the observed weather to predict in a timely instant the rainfall variations leading to the magnitude/intensities of the weather factors. The output of the approach is compared with the results from some other analytical models by Fuller, for proper evaluation of the neural network model performance.

Keywords: Return period, back propagation, training, perceptron, layer

2. INTRODUCTION

In Nigeria, like in other parts of the world, rainfall is such a hydrologic event with uncertain occurrence with predictability problems. According to Woloszyne[1], such irregularity in occurrence reflect in both the distribution and magnitude of precipitation. Notwithstanding that effect, rainfall records over long time spans couldbe used to estimate the likelihood of a particular rainfall magnitude occurring within some return period or reoccurrence interval. With the effect of rainfall alone as a climatic weather variable, the world has become curious and more conscious of climate studies. As earlier observed by Adelekan [2], the ability to predict the possibility of occurrence of rainfallof a particular magnitude or more can help individuals, authorities and engineers to plan for such extreme eventualities as flood, drought, landslide, thunderstorm, etc. Agriculture, one of the indispensable sectors of human regular activities is no less under the dictates and lasting periods of rainfall and the variation of same per season. The predictability of the seasonal stretch of the weather indices is of continuous concern both to the scholars of meteorology, engineers and scientists who know well enough the determination of weather change creates rooms for fixing issues associated with agricultural yield potentials and such, the growth base for the primary, secondary and tertiary economy source units.

Clear enough, as stated by Nnaji [3], if it is determined that a rainfall causing severe flooding occurs once in hundred years, it confers a degree of certainty on an otherwise elusive event, and it will be wise to expect such flood one hundred years from the last one. We will recall that the extreme weather effects of distraught and flooding have caused immeasurable damages.

*CIVIL ENGINEERING DEPARTMENT, ENUGU STATE UNIVERSITY OF SCIENCE AND TECHNOLOGY, ENUGU, NIGERIA

2 NEURAL NETWORK IN RAINFALL PREDICTION

Researchers have done much on the application of the Artificial Neural network in the prediction of the re-occurring events with regular data records. The concept of artificial neurons was first introduced in 1943 [4]. As stated by [5], since the introduction of the concept of artificial neurons, realistic models have been developed both for neurons and for larger systems in the systems in the brain leading to the modern field of neuroscience. In the recent years, the Artificial Neuron Networks (ANNs) have become very popular in the prediction and forecasting in a number of areas including water resources, environmental science, power generation, medicine, finance, etc.

Artificial Neural Networks have vast utility hinged on their applicability in inferring functions from observations especially in applications where the complexity of the data of task makes the design of such functions, by hand, not practical [5]. ANNs' application fall within the categories of (a) Function approximation or expression analysis including time series prediction, (b) Classification including pattern and sequence recognition, (c) Data processing including filtering, clustering, blind source separation and compression, and (d) Robotics including directing manipulators and computer numerical control.

Artificial network modeling is purely a computational technique. If one wants to explain the underlying process or mathematical framework that produces the relationships between the dependent and independent variables, it would be better to use a more traditional statistical model like the regression analysis. If however, the model interpretability is not important, one can often obtain good model results more quickly using a neural network.

2.1 Artificial Neurons

Artificial neurons are building blocks for artificial neural networks. The network simulate the manner of operation of natural neurons in the human body. Fig 1 shows a typical neuron, the input to the neuron, x_i, and the out

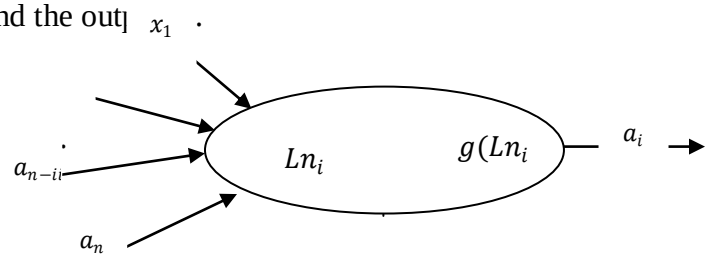

Fig.1 An Artificial Neuron

The input to the neuron x_i is multiplied by a weighting function, W_i, to generate the transformed input, $W_i x_i$, and the summed transformed inputs constitute the variables to the activation/transfer function, g, which generates the activation output a_i.

Hence, given the input vector $x=x_1, x_2, ..., x_n$, the activations of the input unit are set to $(a_1, a_2, ..., a_n) = (x_1, x_2, ..., x_n)$ and the network computes to

$$Ln_i = \sum_{j=1}^{n} W_{j,i} a_j \quad (1)$$

Applying the sigmoid activation function

$$a_i = g(ln_i) = \frac{1}{1 = e^{-ln_i}} \quad (2)$$

The output of the function is compared to the threshold value, and if the output is greater than threshold value, the neuron is activated, and signal is transferred to the neuron output. Alternatively, if the value is less, the signal is blocked.

For a five inputs network and single layer perceptron with three-nodes neuron, the network architecture is as below:

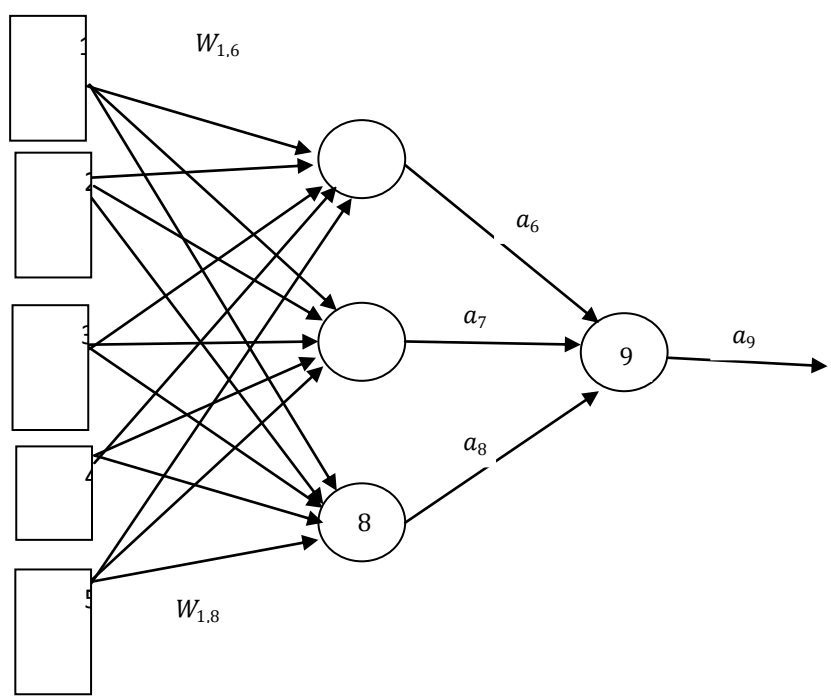

Fig. 2 Five Input Neural Network

Applying Eqn (2) on the network of fig. 2, the activation a_9 computes to

$$a_9 = g\left(W_{6,9}a_6 + W_{7,9}a_7 + W_{8,9}a_8\right) \quad (3)$$

where

$$a_6 = g\left(W_{1,6}a_1 + W_{2,6}a_2 + W_{3,6}a_3 + W_{4,6}a_4 + W_{5,6}a_5\right)$$

$$a_7 = g\left(W_{1,7}a_1 + W_{2,7}a_2 + W_{3,7}a_3 + W_{4,7}a_4 + W_{5,7}a_5\right)$$

$$a_8 = g\left(W_{1,8}a_1 + W_{2,8}a_2 + W_{3,8}a_3 + W_{4,8}a_4 + W_{5,8}a_5\right)$$

The learning process uses the sum of squares error criterion, E, to measure the effectiveness of the learning algorithm [6]:

$$E = E_{rr}^2 = \frac{1}{2}\left(y - h_w(x)\right)^2 \quad (4)$$

where y=experimental value and $h_w(x)$ is the output of the perceptron. The error E is the difference between the network result and the desired result.

The learning process uses the Cauchy Steepest Descent or Gradient algorithm optimization method given by the formula

$$W_j(t+1) = W_j(t) + \gamma \times \nabla E\left(W_j\right) \quad (5)$$

where t = time, and γ = non negative scalar that minimizes the function, $E\left(W_j\right)$, in the direction of the gradient, ∇, and it is equal to the network learning rate, while

$$\nabla E\left(W_j\right) = \partial W / \partial W j$$

(6) But

$$\frac{\partial E}{\partial W_j} = \frac{\partial E}{\partial E_{rr}} \times \frac{\partial E_{rr}}{\partial W_j} \quad (7)$$

Since

$$E_{rr} = \frac{\partial E}{\partial E_{rr}} \quad (8)$$

i.e.

$$\frac{\partial E}{\partial W_j} = E_{rr} \times \frac{\partial W}{\partial W_j} \quad (9)$$

With

$$\frac{\partial E_{rr}}{\partial W_j} = \frac{\partial}{\partial W_j}\left(yg\left(\sum_j = 1^n W_j x_j \right)\right) \tag{10}$$

$$\frac{\partial E_{rr}}{\partial W_j} = g^{'}(in) \times x_j \tag{11}$$

Putting (11) in (9) we get that

$$\frac{\partial E_{rr}}{\partial W_j} = -E_{rr} \times g^{'}(in) \times x_j \tag{12}$$

$$W_j(t+1) = W_j(t) + \gamma \times E_{rr} \times g^{'}(in) \times x_j \tag{13}$$

2.1.1 Training and Learning Processes

The network training could be supervised or unsupervised. In supervised training the network is provided with the inputs and appropriate outputs. That's, the network is trained with a set of examples in a specified manner, while in the unsupervised adaptive learning, the network is provided with inputs but no outputs. The supervised training is used in this work with the appropriate feed-forward network architecture.

As shown in fig. 2, the developed neural model is from a feed forward single perceptron layer network with four nodes and uses the sigmoid activation function. In the process the network learns the error and tries to minimize it. The learning could use any natural optimization agorithms [7] like the Levenberg-Marquardt, gradient descent, genetic algorithm, etc.

3.METHODOLOGY

Rainfall data spanning a period of twenty two years (1980-2001) were collected for differentstates. Since the long-term rainfall data required for planning and design of water resources are not available [8], extending the study period beyond this length would have probably resulted in the elimination of some locations. Not all states are represented partly because of the difficulty in sourcing those data and partly because even when the data are available, they are grossly inadequate for any useful analysis because of the predominance of missing data. The maximum rainfall for every year within the study period was selected for each location and then ranked in descending order.

The return period was then calculated as follows:

$$T = \frac{n+1}{m} \tag{14}$$

where T is the return period, n is the number of data points and m is the rank.

After the ranking the location was subjected to analysis using the methods of Fuller.

The Fuller's method were derived from the general equation of hydrologic frequency analysis which is of the general form:

$$X_T = \bar{X} \quad + K\sigma \tag{15}$$

Where X_T is the value of the variate X of a random hydrologic series of return period T. K = a frequency factor which depends on the return period. σ = standard deviation of the variate. The random hydrologic series in question could be flood, rainfall, earthquake, landslide, thunderstorm, etc. In this study, X_T is the maximum annual rainfall depth of return period T.

The **Fuller's** method is given by

$$X_T = \bar{X} + 0.8\bar{X}Log\ \ T \tag{16}$$

The T, X, n, m, and σ were input into the neural network to simulate the rainfall reoccurrence intervals for Enugu .

4. RESULTS

The results of reoccurrence interval using the ANN were plotted in a graph on the same log scale as that from the Fuller method as shown below:

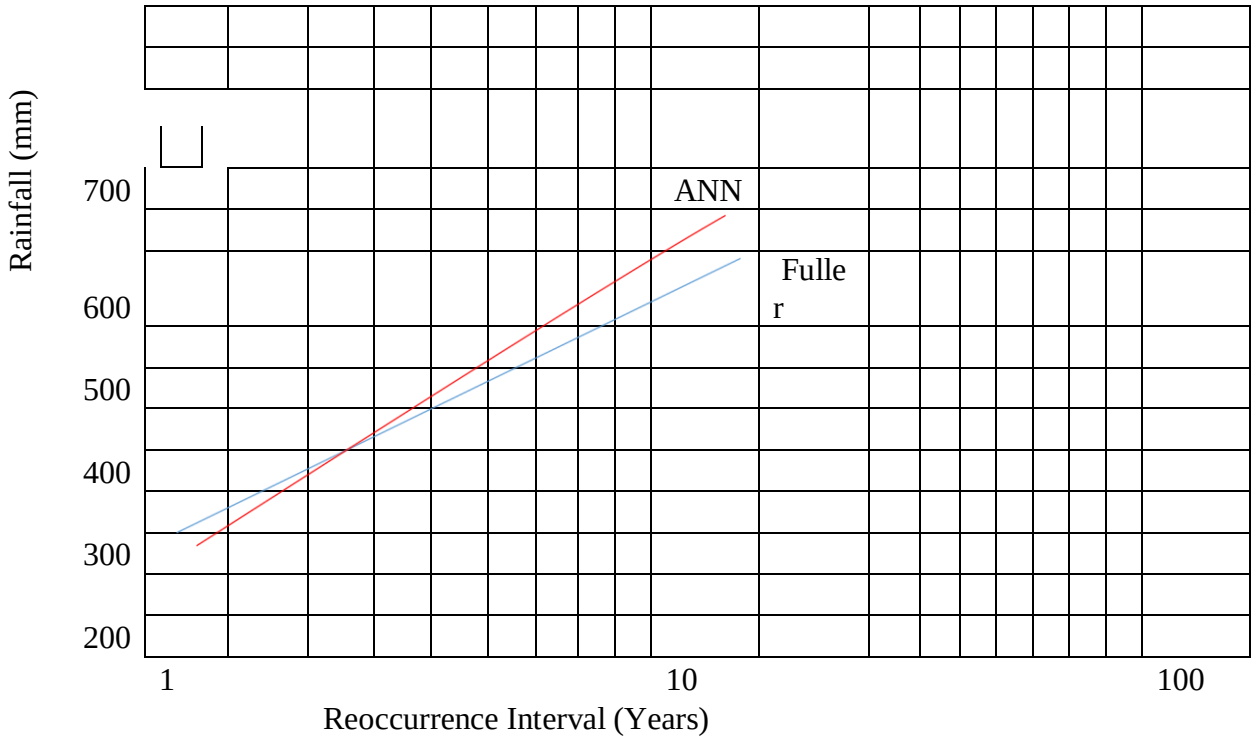

Fig 3 Rainfall against Reoccurrence Interval for the Fuller's and ANN methods

5. CONCLUSION

From the Fig. 3, it could be concluded, given the standard error of estimate inherent on the Fuller's method.

REFERENCES

[1] Woloszyne, E Analysis of Rainfall Data, Gdansk Meteorological Station,International Symposium on Water Management and Hydraulic Engineering, Ohrid/Macedonia, 1-5 Sept,2009.

[2] Adelekan, I. O. Spatio-Temporal Variations in Thunderstorm Rainfall over Nigeria, International Journal of Climatology, Vol. 18, Issue 11,1998, pp. 1273-1284.

[3] Nnaji, C.C. Prediction of Rainfall Magnitudes and Variations in Nigeria, Nigerian Journal of Technology, Vol. 29 No 2, June 2010, pp. 46-53.

[4] McCulloch, W.S. and Pitts, W.A., A Logical Calculus of the Ideas Imminent in Nervous Activity, Bulletin of Mathematical Biophysics, 5, 1943, pp. 115-133.

[5] Russel, S.I. and Norvig, P., Artificial Intelligence: A Modern Approach, Pearson Educational Inc., Upper Saddle River, New Jersey, USA, 2003.

[6] Russel, S.I. and Norvig, P., Artificial Intelligence: A Modern Approach, Pearson Educational Inc., Upper Saddle River, New Jersey, USA, 2003.

[7] Haupt, R.L. and Haupt, S.E. Practical genetic algorithm. John Wiley and sons, Inc , Hoboken new Jersey, USA, 2004.

[8] Dike, B. U. and Nwachukwu, B. A.Analysis of Nigerian Hydrometeorology Data, Nigerian Journal of Technology,Vol. 22, No 1, 2003.