Ability and protection of the wind turbine DFIG transient errors in connection to the distribution network of Semnan

Mehdi Paktint[1],

[1]Semnan Science and Research branch,

Islamic Azad University, Semnan, Iran

Alireza Moradi[2]

[2]Semnan Science and Research branch,

Islamic Azad University, Semnan, Iran

Abstract

This paper focuses on the functionality and protection doubly fed induction generator DFIG is the transient errors. So the main focus in this article is drawn into the DFIG wind turbine control and ability to protect themselves and their power converter is no definite error during this review the interaction between the variable speed DFIG wind turbines and power systems under disturbances provides. The purpose of this paper is to carry out various simulations provide insight and understanding of the impact of the error on the network and the dynamic behavior of objects DFIG DFIG wind turbines wind turbines during the short circuit is simulated network.

Keywords: protection doubly fed induction generator DFIG, tilt angle or deviation control system, Crowbarresistance

Introduction

Wind energy is currently one of the fastest growing processingindustry around the world and many countries are planning for the future development of wind energy there. Influence the production of electric power from wind energy systems has increased over the past decade. Challenges for network operators to ensure a reliable power system operation and is safe.

Today, power system operators in several countries including Denmark and Germany [1,2] code was intended that, in fact, wind energy network codes need to conduct operations with similar functions to control several conventional power plants . One of these tasks, error control is passing through the turbines. The first step is designed to protect and control wind turbine during short stays in the network.

Variable speed DFIG wind turbine system configuration

As a basic configuration for large wind turbines, wind turbine DFIG during fault they can help stabilize the transmission system, according to the Network Code [1]. The rest will remain connected to the network. This problem of the protection and control of the generator / converter in practice to simulate the actual response of a wind turbine DFIG and the main components of

electrical and mechanical components and control is considered as a model. DFIG wind turbine is the same model used in [7,8] described, and thus only. Very brieflyexplained here. Figure 1.Block diagram of the major components of the wind turbine DFIG show.

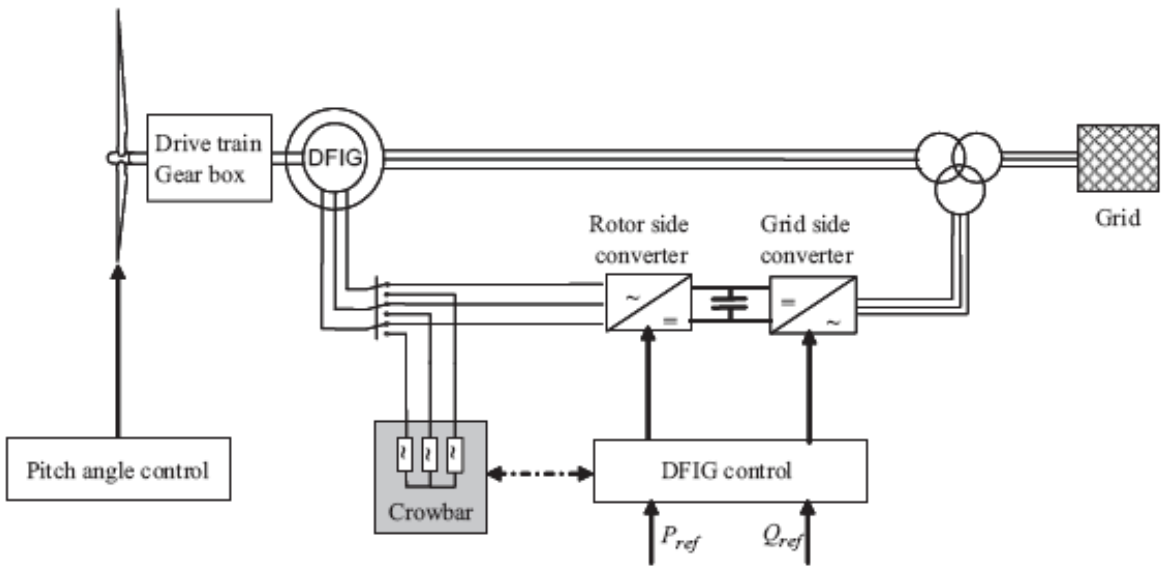

Figure 1. Block diagram of the DFIG wind turbine

Pitch angle control (control angle or slope)

(Pitch control) diversion angle is realized by a PI controller in order to get a real answer angle control, servomechanism model for a fixed time, Tservo and restrictions Pitch control angle of and rate of change shown in Fig. 2 to examine.

Planning for the control angle in order to compensate the non-linear aerodynamic characteristics of [7] is.

Limiting rate of change over the network error is crucial because it determines how fast we can move on aerodynamic and can be used to prevent excessive speeds reduce time error.

DFIG control system

DFIG control and performance of the operations discussed just now, and in a variety of publications, eg, [7,12,13]. A detailed description of them has

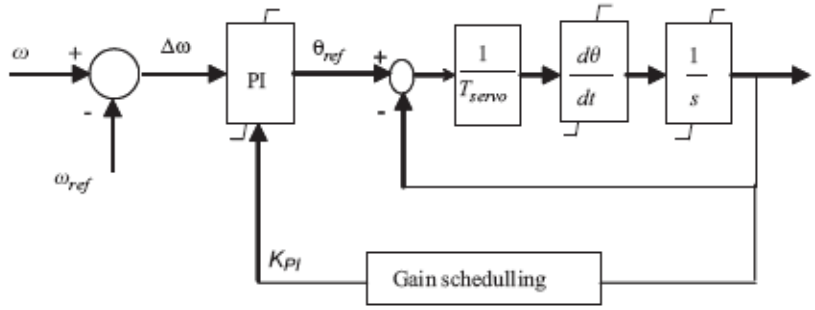

Figure 2. Pitch angle control

Dual power DFIG stator voltage that the direct voltage network and the rotor of the power converter is applied. The converter consists of two conventional voltage source converter (the converter rotor, RSC and the network adapters, GSC) and a common DC bus as shown in Figure 1. Here we PowerFactory standard model library for DFIG and prove the power converter EMT electromagnetic transient simulation is also done through the simulation using snapshot components where higher levels of model detail in [15] described used.

Second, a set of signals to control the second stage in Figure 3.is shown. Reactive power is $Q_{\text{ref}}^{\text{grid}}$ set to RSC can be given a certain amount or zero wind turbine DFIG reactive power $Q_{\text{ref}}^{\text{grid}}$ compensation in the GSC usually the set point of reactive power is set to zero.

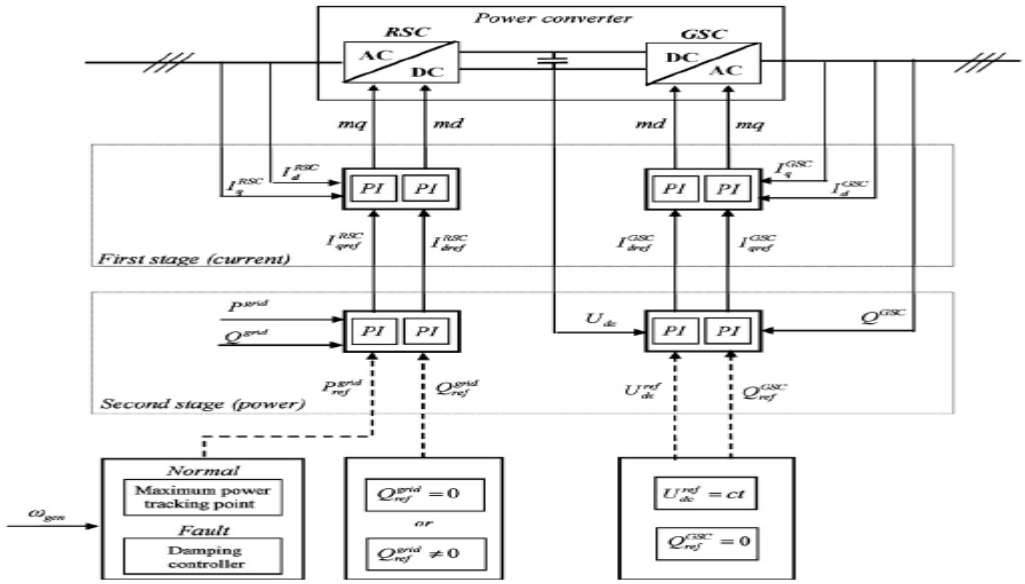

Figure 3. A schematic electrical control DFIG

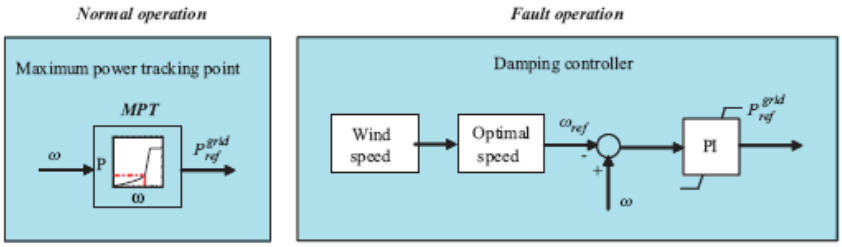

Figure 4. Set-point active power reference to the rotor-side converter

When a fault is detected P_{ref}^{grid} , for example, between normal operation (MPT) and therefore the creation of fault, the switch there. Different control schemes can be used for damping of the oscillations. At this point, attenuation control proposed by [3] is used.

PI controller damping active power reference signal for the RSC control based on the deviation between the actual and the reference speed generator produces.

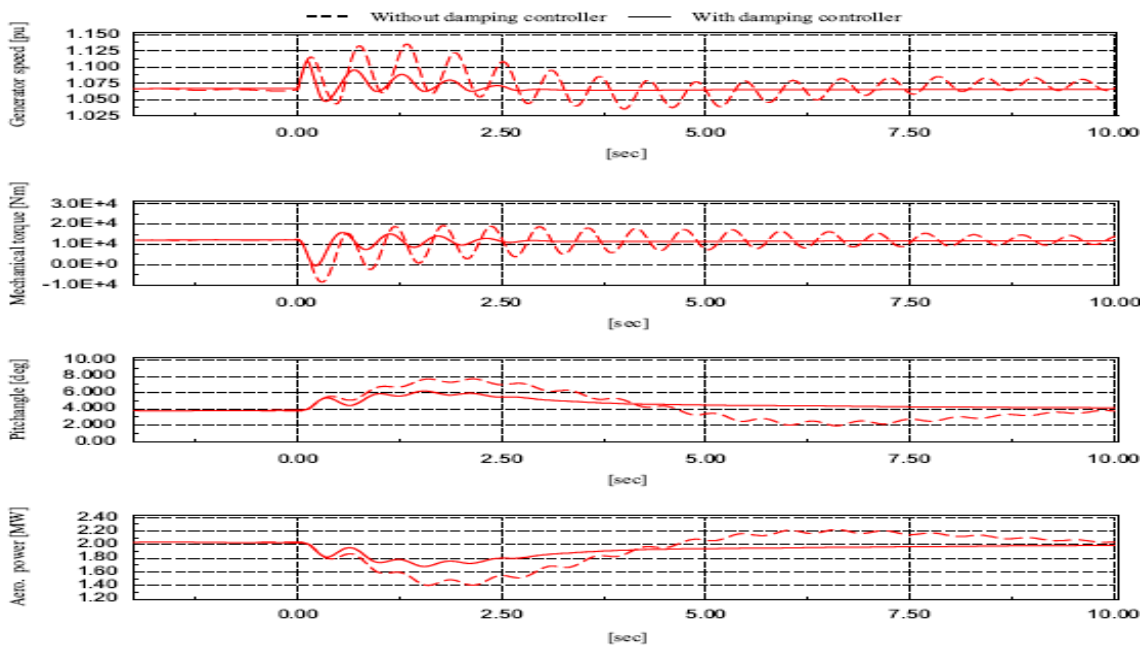

Figure 5. The performance of DFIG a network error when a controller is used attenuation

System Protection

Use a percentage of the full power converter that is connected to the rotor, the wind turbine with doubly fed induction generators in terms of economic and attractive. However, the converters are highly susceptible to disturbances that require a network security system appropriate to make necessary.No worries protection system DFIG stator for direct connection to the network in the event of major errors, and ultimately current to the stator. Due to the coupling between the stator and the rotor and diseases network according to the laws of magnetic fluxof the stator to the rotor transmitted and they both current and voltage rises over the place joining the error. In addition, a flows rush caused the rotor to the terminal .Crowbar protection is a part of the model DFIG software DigsilentPowerFactory. While the simulation model to dynamically control the power

system in the toolbox. Crowbar protection after the initial time critical can be erased and then RSC enable independent control again of active and reactive power undertakes Figure 6 static torque curve and reactive power for various crowbar resistors for a DFIG, 2 MW, respectively.

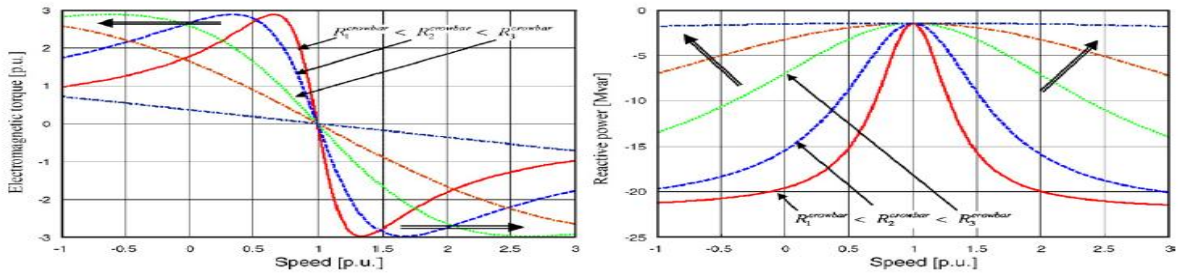

Figure 6. The static torque curve and reactive power as a function of speed for different crowbar resistors

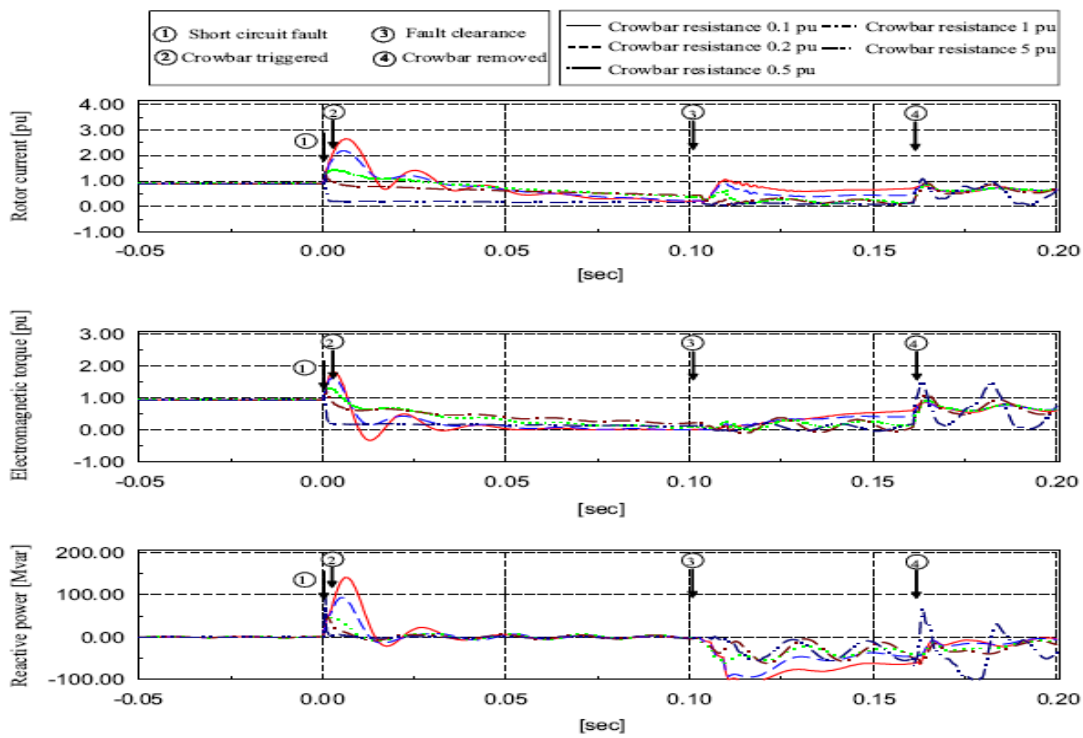

Figure 7.dynamic performance DFIG. With different levels of resistance crowbar

In Figure 7, flows electro-magnetic torque and reactive power in the generator rotor and the rotor begins to increase. In the second short-circuit current until the current protection of the crowbar resistor. In this simulation prevent or delay when switching replace the shunt resistor was not considered. Figure 7 crowbar current limiting resistor and its impact on the rotor by reactive power shows. Smaller resistance value (1 pu) may go up and peak torque transient flows at the time of error.

Study of a power system

This section examines the dynamics between the variable speed wind turbine DFIG and transmission errors as discussed immediately after the error. For this purpose, a small power system software will assume power factory DIGSILENT. As shown in Figure 8 wind farm off shore (offshore) that is made of DFIG wind turbine power system model [20] described. 0.7 kV to 400 kV voltage bus bars of the four central stations and there are several centers of consumption. Central station with synchronous generators that are placed on the primary voltage control. Frequency stability is the responsibility of the larger generators.

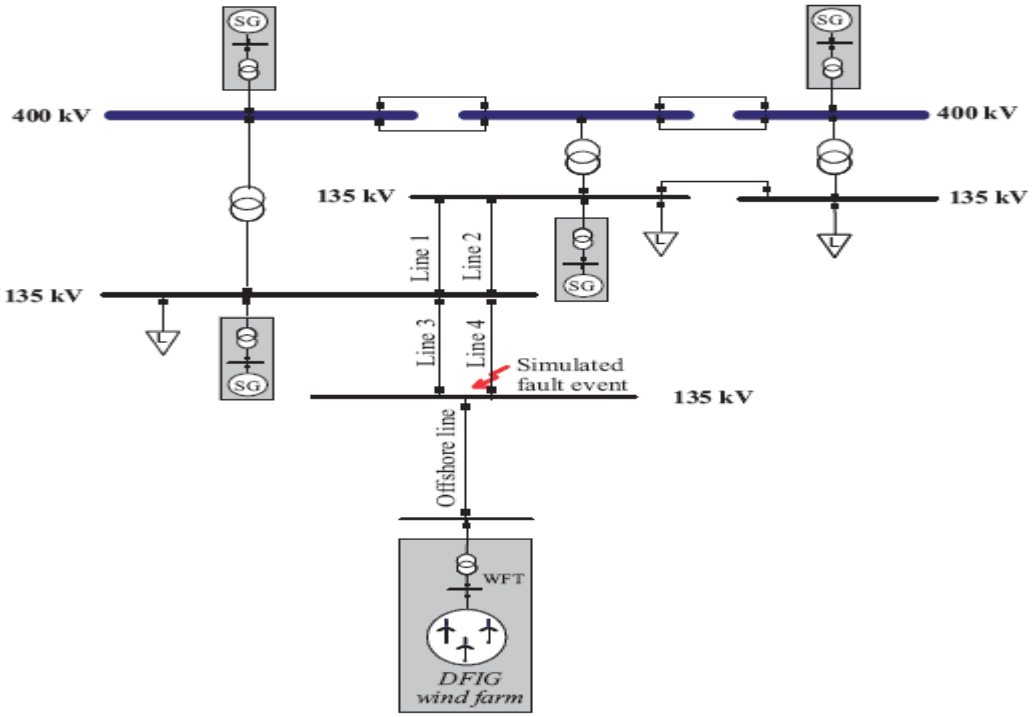

Figure 8. The power system studied

Behavior of wind turbine immediately after error

At the moment the DFIG fault terminal voltage to drop, thus reducing the rotor and the stator flux and electromagnetic torque and thus reduce active power by cannabis (Figure 9)

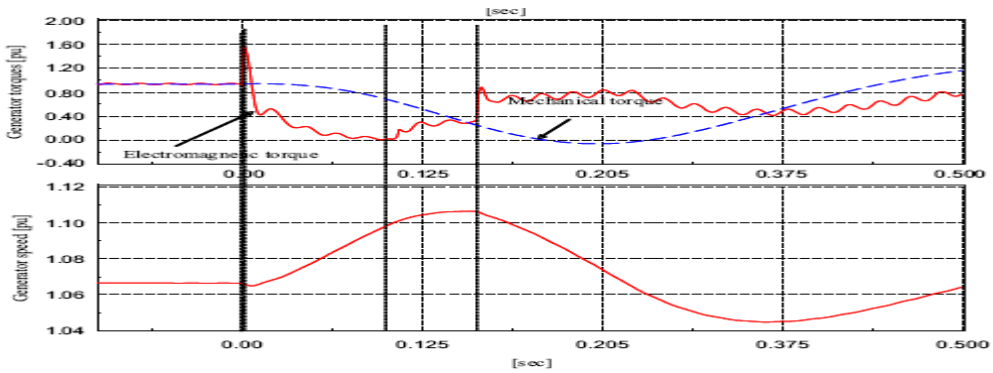

Figure 9. Terminal generator voltage, reactive power, active power, torque, electrical, mechanical torque and speed

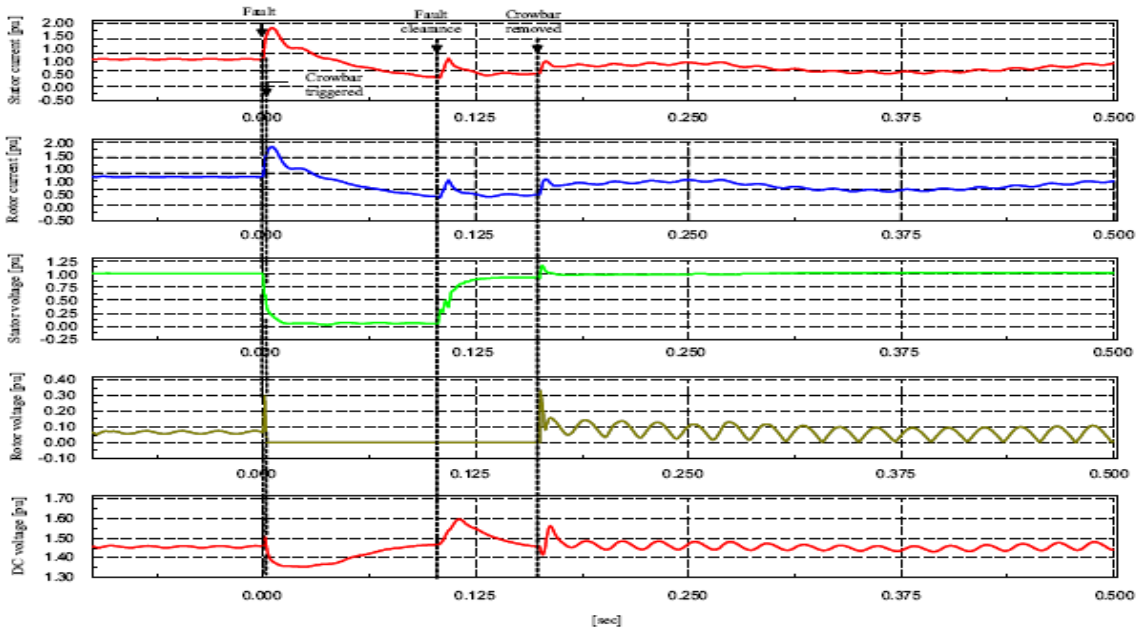

Figure 10. Voltage and current waveform generator

Behavior after erasure error

Immediately after fault clearing, the stator voltage is restored, the electromagnetic torque and active power begins to increase (Fig. 9). Note that when the error is cleared voltage does not immediately improve. And a voltage less than their nominal value will be.And when your name reaches the limit voltage Crowbar will be shut down. And the reason for this is that only after the elimination of error generator behaves like SCIG and then began to absorb the reactive power for magnetization. (Figure 9).

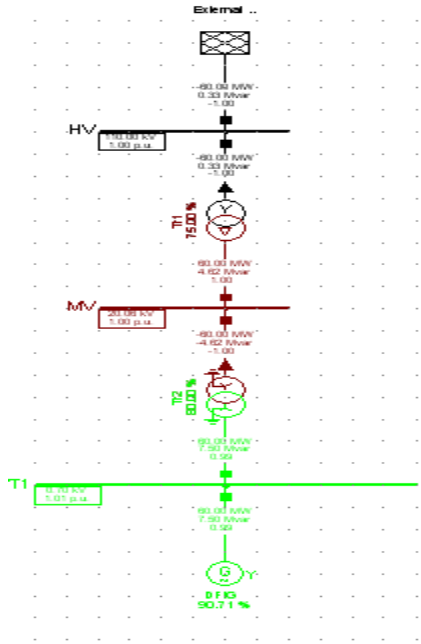

Figure 11. Single line diagram of the network

The network of 30 wind turbines with DFIG 0.69KV voltage is connected to the Bass WT1 nominal capacity of 2MW each turbine DFIG And 30 transformers 2.5MVA (a total of 75MVA (with a conversion ratio of 0.69 / 20 kV and connection star power and from there you can transfer to the MV bus by a 110KV voltage transformers with 80MVA capacity becomes.

Network for two 20% nominal power generators without resistance CrowbarAnd a full-time strength Crowbar.

Check network simulation results with 20% power generator without Crowbar

. Simulation RMS method we do in the first instance a three phase short circuit impedance Rf = 0.05, Xf = 0.05 ohm on the bus happens at the moment of error rotor current up from time 150ms error will be cleared as shown in Figure 12, the values of voltage and current although not drawn rotor generator full load but when disturbances to instability and a large current is drawn from the rotor shows.

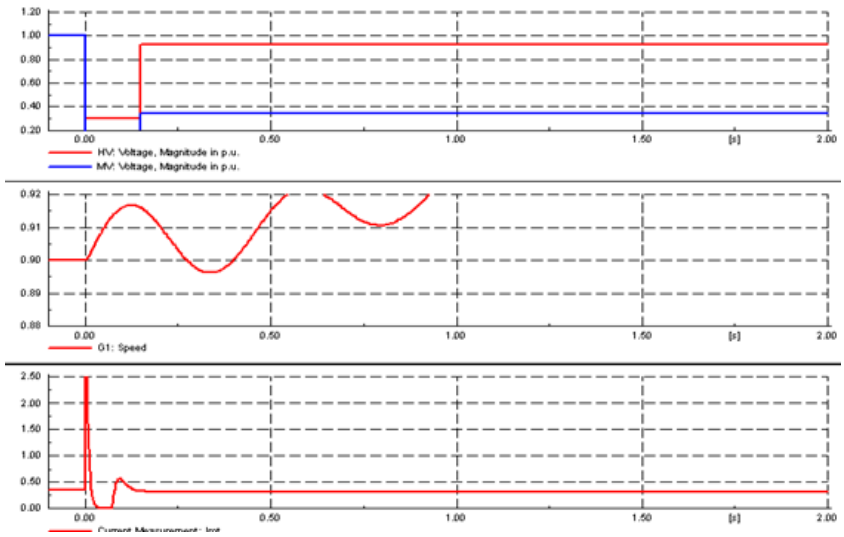

Figure 12. Three phase short circuit impedance

The results of a power system with the DFIG with Crowbarresistance

In the first moment a three-phase short circuit impedance Rf = 0.05, Xf = 0.05 ohm occurs on the bus as shown in Figure 13 and in the same moment in time, the error increased rotor current and rotor current limit circuit Crowbarresistance doesAnd at the time of 150ms fault is cleared after the fault clearing Crowbarout of orbit and at the moment we get out Crowbarslightly increase the flow generator. Also other characteristics including speed, voltage, active and reactive power are improved.

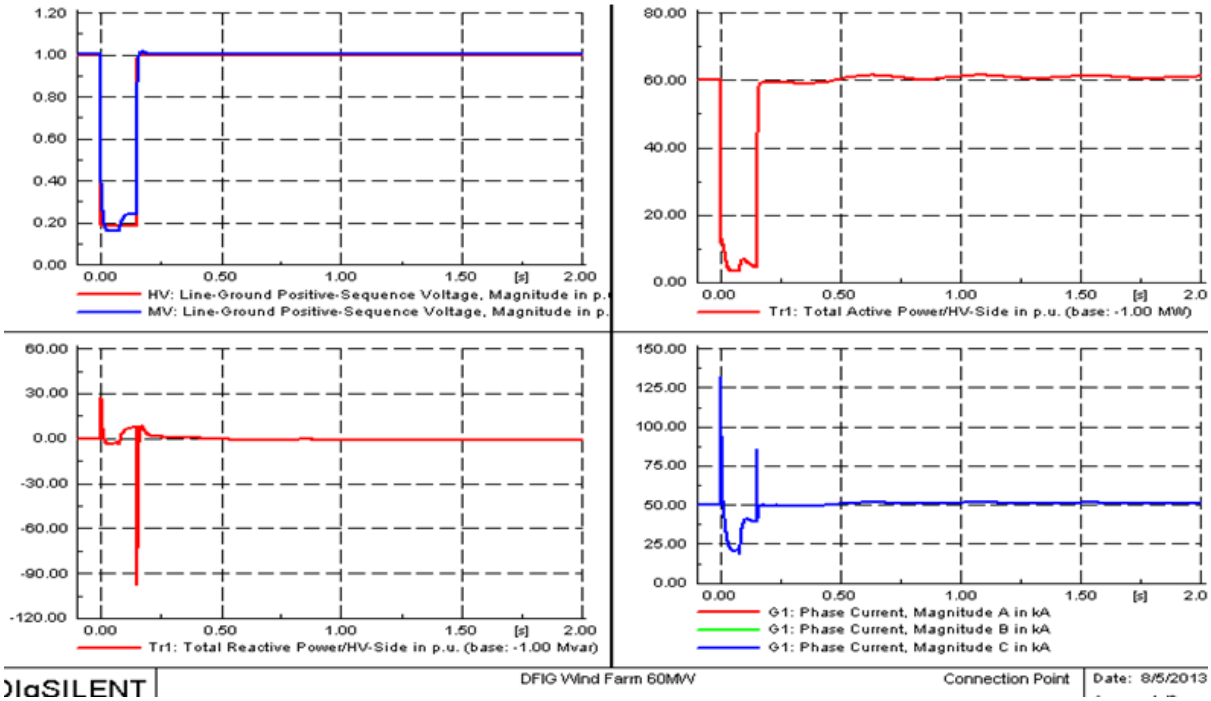

Figure 13. Waveform voltage and speed of the flow generator you active and reactive power

Conclusion

This article is to evaluate wind turbines stand out against wrongdoing. And also the interaction between DFIG wind turbines with variable speed and power system during the fault pays. Modeling and control of wind turbine DFIG protection with a focus on protection under short-circuit the converter is discussed. The dynamic model of wind turbine variable speed DFIG, resistance to error control and protection of power systems using the software is Dgsilent . Protection and control of DFIG wind turbine converter to withstand the necessary error protection system of converter (Crowbarresistance) when the voltage transient irritation that happen. In a lot of generator and converter while the converter could be damaged otherwise see. When the stimulation is Crowbar DFIG behavior of like a normal SCIG. Therefore, temporarily lose the ability to control. Crowbarresistance to the flow of information in the generator rotor and the generator reactive power demand depends on the error. Also during the short circuit protection become unbalanced due to the expensive equipment is a matter of control system and using Protection. Crowbarthe destructive effects of current known as the rotor on the adapter is to prevent the practice.

References

[1] Eltra. Specifications for connecting wind farms to the transmission network. ELT 1999-411a, Eltra doc. no. 74174, Eltra, 2000 /http://www.eltra.dkS.
[2] E.O.N. Netzanschlussregeln Hoch-und Hoechstspannung, Report ENENARHS2006, April 2006, 46pp, www.eon-netz.com.
[3] Akhmatov V. Analysis of dynamic behavior of electric power systems with large amount of wind power, PhD thesis, 2003, Ørsted DTU.
[4] Sørensen P, Hansen AD, Christensen P, Meritz M, Bech J, Bak-Jensen B, et al. Simulation and verification of transient events in large wind powerinstallations. Risø-R-1331 (EN), 2003, 80pp.
[5] Hansen AD, Iov F, Blaabjerg F, Hansen LH. Review of contemporary wind turbine concepts and their market penetration. Wind Eng 2004;28(3):247–63.
[6] Hansen AD, Michalke G, Sørensen P, Lund T, Iov F. Co-ordinated voltage control of DFIG wind turbines in uninterrupted operation during grid faults. Wind Energy, in press, published online in Wiley Interscience (www.interscience.wiley.com).
[7] Hansen AD, Jauch C, Sørensen P, Iov F, Blaabjerg F. Dynamic wind turbine models in power system simulation tool DIgSILENT, Risø-R-1400(EN), 2003.
[8] Hansen AD, Sørensen P, Iov F, Blaabjerg F. Centralised power control of wind farm with doubly-fed induction generators. Renew Energy 2006;31:935–51.
[9] Akhmatov V. Variable-speed wind turbines with doubly-fed induction generators. Part II: Power system stability. Wind Eng 2002;26(3):171–88.
[10] Holdsworth L, Charalambous I, Ekanayake JB, Jenkins N. Power system fault ride-through capabilities of induction generator based wind turbines. Wind Eng 2004;28(4):399–412.
[11] Sun T, Chen Z, Blaabjerg F. Transient stability of DFIG Wind Turbines at an external short-circuit fault. Wind Energy 2005(8):345–60.
[12] Leonhard W. Control of electrical drives. Berlin: Springer; 2001.
[13] Pena R, Clare JC, Asher GM. Doubly-fed induction generator using back-to-back PWM converters and its application to variable speed wind-energy generation. IEE Proc Electron. Power Appl. 1996;143(3):231–41.

[14] Poeller M, Achilles S. Aggregated wind park models for analyzing power system dynamics. In: Fourth international workshop on large-scale integration of wind power and transmission networks, 20—21 October 2003, Billund, Denmark, DIgSILENT, 10pp.
[15] DIgSILENT GmbH. DIgSILENT technical documentation—PowerFactory, 2006.
[16] Heier S. Grid integration of wind energy conversion systems, 1998, ISBN:0-471-97143.
[17] Akhmatov V. Variable-speed wind turbines with doubly-fed induction generators. Part IV: Uninterrupted operation features at grid faults with converter control coordination. Wind Eng 2003;27(6):519–29.
[18] Gail,G, Hansen AD, Hartkopf T. Controller design and analysis of a variable speed wind turbine with doubly-fed induction generator. Athene: EWEC; 2006.
[19] Hansen MH, Hansen AD, Larsen TJ, Øye S, Sørensen P. Control design for a pitch-regulated variable speed wind turbine. Risø-R-1500 (EN), 2005, 84pp.
[20] Akhmatov V, Nielsen AH. Simulation model of the transmission grid for a large offshore windfarm, used.